CODE	DESCRIPTION	POS.	GR.
K070024296B	BASIS	1	
279306A	WHEEL DIAMETER 30 MM	2	
K190000500A	RUBBER PLUG	3	
K070024396A	DRAINING MOTOR FIXING PLATE	4	
J060003900B	DRAINING MOTOR	5	
K070024496A	WATER PUMP RUNNER	6	
276058A	ELECTRICAL SENSOR	7	
K070024596A	WATER TANK COVER	8	
K260005100A	EPS CONVEYOR WITH NOZZLE	9	
K260005200A	EPS MOTOR CONVEYOR	10	
K070024696A	CENTRIFUGAL FAN D.200	11	
J060004000A	CONDENSER FAN	12	
K070024796B	MOTOR MOUNT BRACKET	13	
J060004100A	EVAPORATOR FAN MOTOR	14	
K060003900A	TANGENTIAL FAN D.135X264	15	
G0544A	EPS LOWER CONVEYOR GROUP	16	
K260005400A	EPS UPPER CONVEYOR	17	
279391A	FAN ELASTIC MOUNT	18	
279392A	TEFLON BEARING	19	
K070024896A	MOTOR LOCKING BRACKET	21	
K210019200A	CAPACITOR MF 1,2	22	
K160005000B	CAPACITOR WIRING	23	
K200004800A	POWER BOARD HUALIAN	24	
G0545A	INTERMEDIATE WATER CONTAINER GROUP	25	
K210003800A	CAPACITOR MF 20 DOUBLE FASTONS	26	
275977A	CAPACITOR 3,15 mF DOUBLE FASTON	27	
598864A71	AIR OUTLET PIPE ASSEMBLY	28	
K070025093A	WINDOWS CONVEYOR	29	
592501A90	SUCTION CUP AND CORD ASSEMBLY	32	
G0568A	PIU' ECO FRONT PLASTIC PARTS ASSY	33	
K070025272A	RIGHT PLASTIC SIDE FRAME	34	
K070025372A	LEFT PLASTIC SIDE FRAME	35	
K070025472A	UPPER DOME	36	
K070025572A	CONTROL PANEL	37	
G0565A	PIU' ECO GRILL GROUP	38	
G0546A	REAR PART GROUP	39	
K070025872A	FILTER	40	
K070027295A	LCD GLASS	41	
K070026496B	RIGHT FILTER SADDLE	42	
K070026596A	LEFT FILTER SADDLE	43	
255546A	POWER CABLE	44	
K160013000B	WIRING ASSEMBLY	47	
G0566A	PIU'ECO COMPRESSOR ACCESSORIES ASSY	48	
K170049200A	CONTROL PANEL LABEL	49	
K200005000A	REMOTE CONTROL HUALIAN	50	
K200004900A	CONTROL BOARD HUALIAN	51	
K210023600A	WATER PROBE WIRING	52	
J300003100A	RECHI COMPRESSOR 39C143C	53	
K210023500A	ROOM TEMP.PROBE	54	
G0567A	EVAPORATOR HEAT EXCHANGER GROUP	55	
K100037600B	DISCHARGE PIPE	56	
K100037700C	SUCTION PIPE	57	
K100037800A	EVAPORATOR OUTLET PIPE	58	
K100039000B	CONDENSER OUTLET PIPE+CAPILLARY	59	
K100038900B	CONDENSER INLET PIPE	60	
K100037900A	EVAPORATOR INLET PIPE	61	
K030004800A	CONDENSER HEAT EXCHANGER	62	

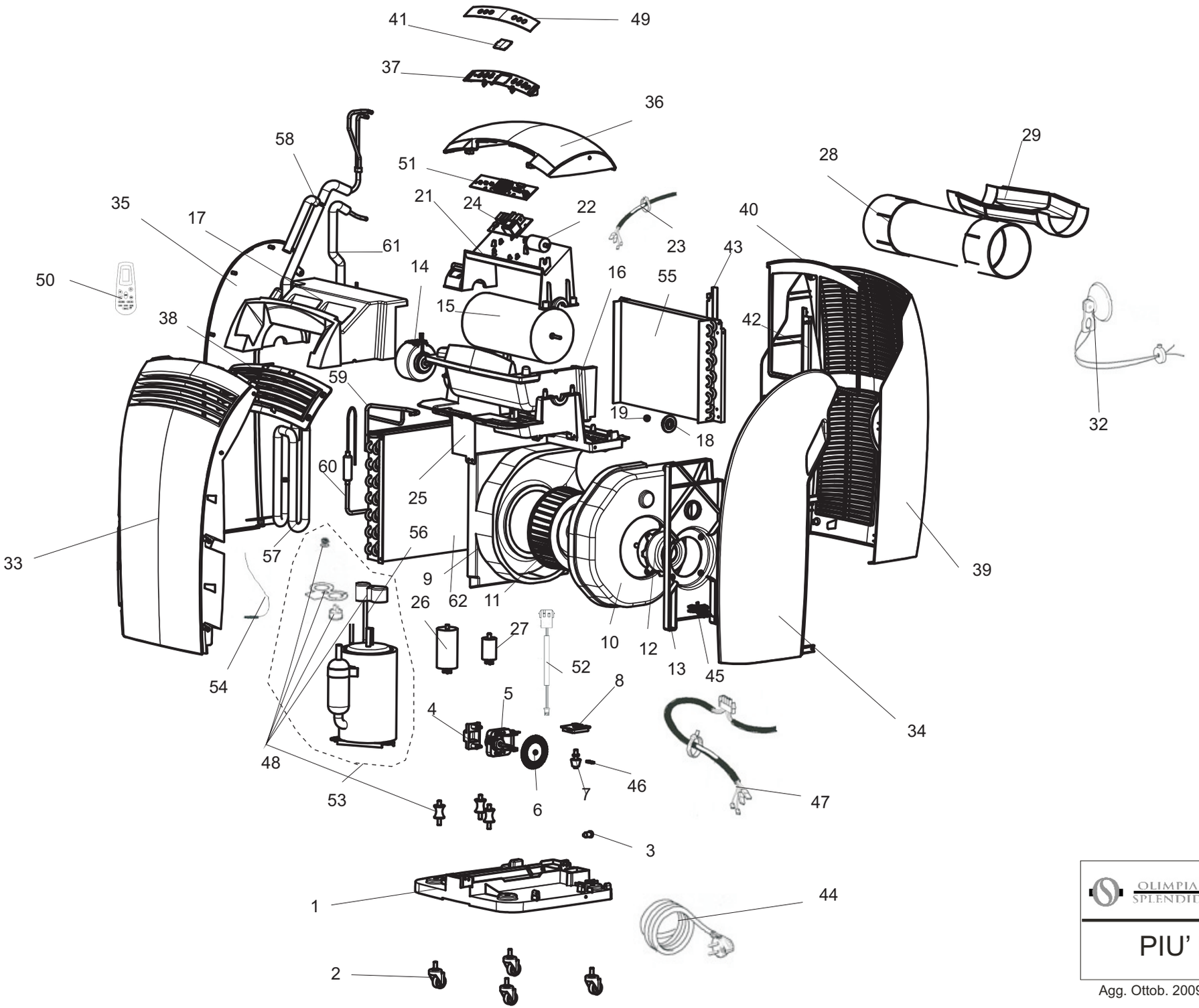

OLIMPIA SPLENDID Via G. Rossa 1-3 Gualtieri (R.E.)

PIU' ECO

Agg. Ottob. 2009 - RIF: 109.00